

SIERRA AT UCF 2024

ARKANSAS RAZORBOTZ

2026–2027 SPONSOR PACKET

STUDENT ENGINEERING ▪ LUNAR EXCAVATION ▪ AUTONOMY

UNIVERSITY OF ARKANSAS RAZORBOTZ

Razorbotz is a student-led engineering team at the University of Arkansas competing in NASA's Lunabotics Challenge.

Our mission is to design, build, and test robotic systems capable of excavating and transporting lunar regolith simulant under challenging competition constraints.

Through this work, students gain practical experience in design, manufacturing, autonomy, and multidisciplinary engineering.

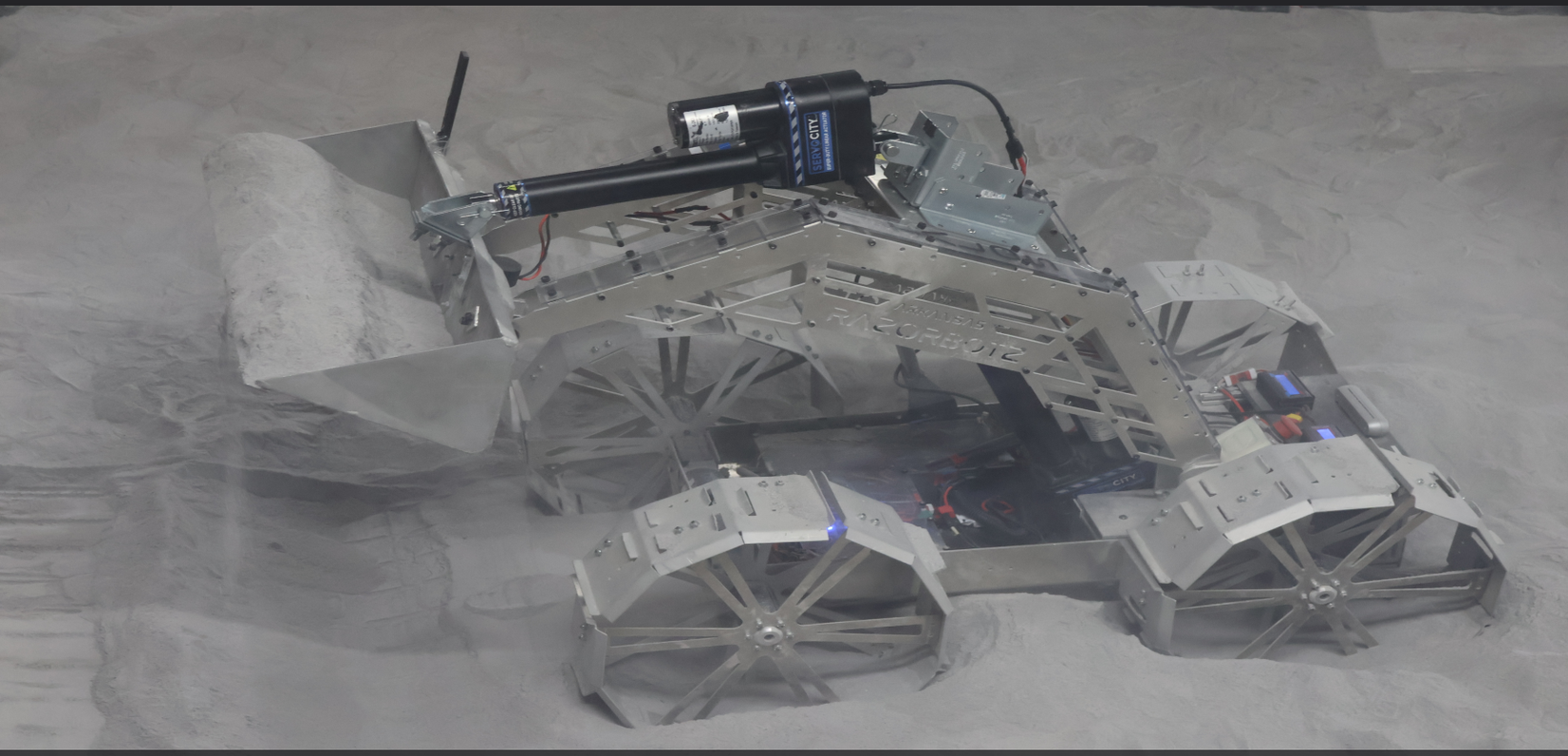

TALOS AT UCF 2026

Andrew Burroughs
Project Lead
waburrou@uark.edu

Dr. Uche Wejinya
Project Sponsor
uwejinya@uark.edu

UNIVERSITY OF ARKANSAS RAZORBOTZ

ENGINEERING EXCELLENCE

Our team brings together mechanical design, fabrication, electrical integration, and advanced robotics software to develop complete excavation systems.

Our platform, Talos, provides opportunities to investigate rover operation, robust controls, and autonomous tasks.

Students work with ROS 2, embedded controllers, computer vision, localization, navigation, and simulation platforms as they develop and validate these systems.

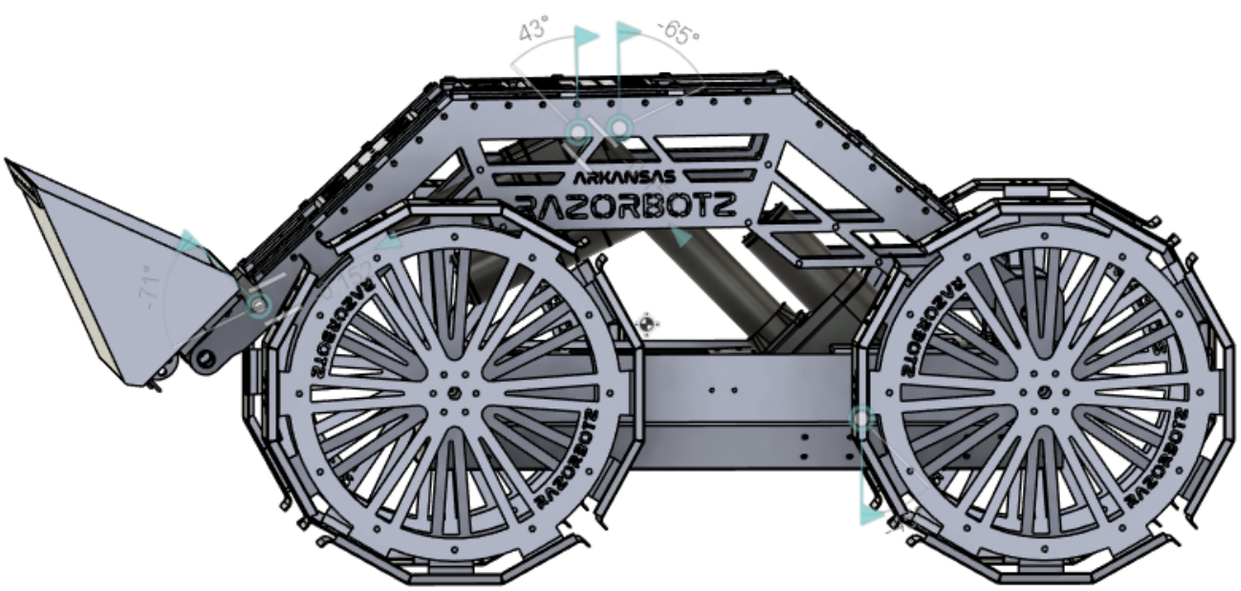

CAD / SIMULATION

Andrew Burroughs
Project Lead
waburrou@uark.edu

Dr. Uche Wejinya
Project Sponsor
uwejinya@uark.edu

UNIVERSITY OF ARKANSAS RAZORBOTZ

MORE THAN A ROBOT

Every design review, fabrication challenge, and field test connects classroom knowledge with real-world engineering practice.

Razorbotz encourages students to collaborate across disciplines, solve open-ended technical problems, manage schedules and resources, and develop leadership skills.

Our sponsors help make those experiences possible while supporting the next generation of engineers and technical leaders.



TEAM AT COMPETITION

Andrew Burroughs
Project Lead
waburrou@uark.edu

Dr. Uche Wejinya
Project Sponsor
uwejinya@uark.edu

UNIVERSITY OF ARKANSAS RAZORBOTZ

PARTNER WITH RAZORBOTZ

Our progress depends on organizations willing to invest in student engineering. Partners can support robot development, testing, manufacturing, and competition travel.

Potential sponsor recognition includes:

- Recognition on team materials and online
- Logo placement on the robot when feasible
- Project and product-in-use photos
- Invitations to design reviews or demonstrations
- Guided or virtual workspace tours

WAYS TO CONTRIBUTE

Funding: manufacturing, materials, equipment, and travel

In-kind support: sensors, motors, electronics, and tools

Services: fabrication, software access, and engineering mentorship

Andrew Burroughs
Project Lead
waburrou@uark.edu

Dr. Uche Wejinya
Project Sponsor
uwejinya@uark.edu

UNIVERSITY OF ARKANSAS RAZORBOTZ



COMPETITION PITS

As an organization, we rely on support from partners who believe in hands-on engineering education.

Your support helps our members turn ambitious ideas into real robotic systems and develop skills that extend far beyond the classroom.

Start a partnership: uwejinya@uark.edu

Andrew Burroughs
Project Lead
waburrou@uark.edu

Dr. Uche Wejinya
Project Sponsor
uwejinya@uark.edu